# Lateral File

# 11142

FLUENT

## Lateral File

- Finished in White Maple laminate
- Accepts letter, legal and A-4 sizes files
- Glass top work area
- Five year limited warranty

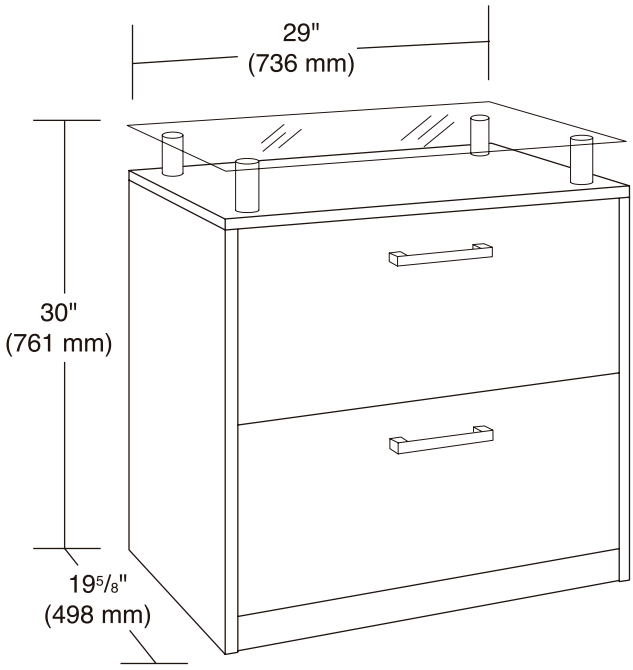


O'Sullivan® Furniture